Controls Explorer

Controls-Explorer.com

TUTORIAL BASICS -- HARDWARE CONFIGS

EDITION: 1.000

Controls Explorer

Controls-Explorer.com

TUTORIAL BASICS --

PID Basics, NEW

NOTE: *NEW* Look for PID Basics, just before the Safety

SIEMENS TUTORIALS: BASICS -- HARDWARE

Material Contents:

EDITION: 1.000

BASICS TUTORIAL PART #1

HARDWARE CONFIGS:

- √ Execute a simple project with DIGITAL, ANALOG Input as well as Output
- √ Learning the Hardware Configuration; Preparing the Main RACK
- √ Configure Profinet as well as Profibus Networks.
- √ Preparing the Profinet & Profibus Remote Racks.
- √ Symbols Editing

EXAMPLE PROJECT TASK: BASICS #1

CONTROLLING 1 WATER PUMP, WITH ANALOG IP PRESSURE FEEDBACK MONITORING AND ANALOG OP RE-TRANSMITTING.

√ **1. Control 1 water pump, by Start / stop PB. USE HMI as well for all the PB Functions. EACH Pump to have PILOT LAMP, "PL";**
Location: Local in the Main Panel, Start / Stop PB.

√ **2. Each Pump-Motor to have independent Contactor, Over-Load Relay.**
Location: REMOTE "PROFINET" Network.

√ **3. Each Pump-Motor to have independent Analog Pressure Transducer, 4…20MAmps.**
Location: REMOTE "PROFINET" Network.

√ **4. Retransmit The ANALOG Pressure signal, Individually, Hardwired by 0..10VDC to some 3rd party (Customer).**
Location: Local in the Main Panel

√ **5. Precondition before starting the Pump (not an e-stop) by DI over Profibus (Customer).**
Location: 2ND Remote (in the Field) Over PROFIBUS.

√ **6. EACH Pump Line has got CUSTOMER SUPPLIED Electro-Pneumatic VALVE, Must be turned-on by HMI PB.**
Location: 2ND Remote (in the Field) Over PROFIBUS.

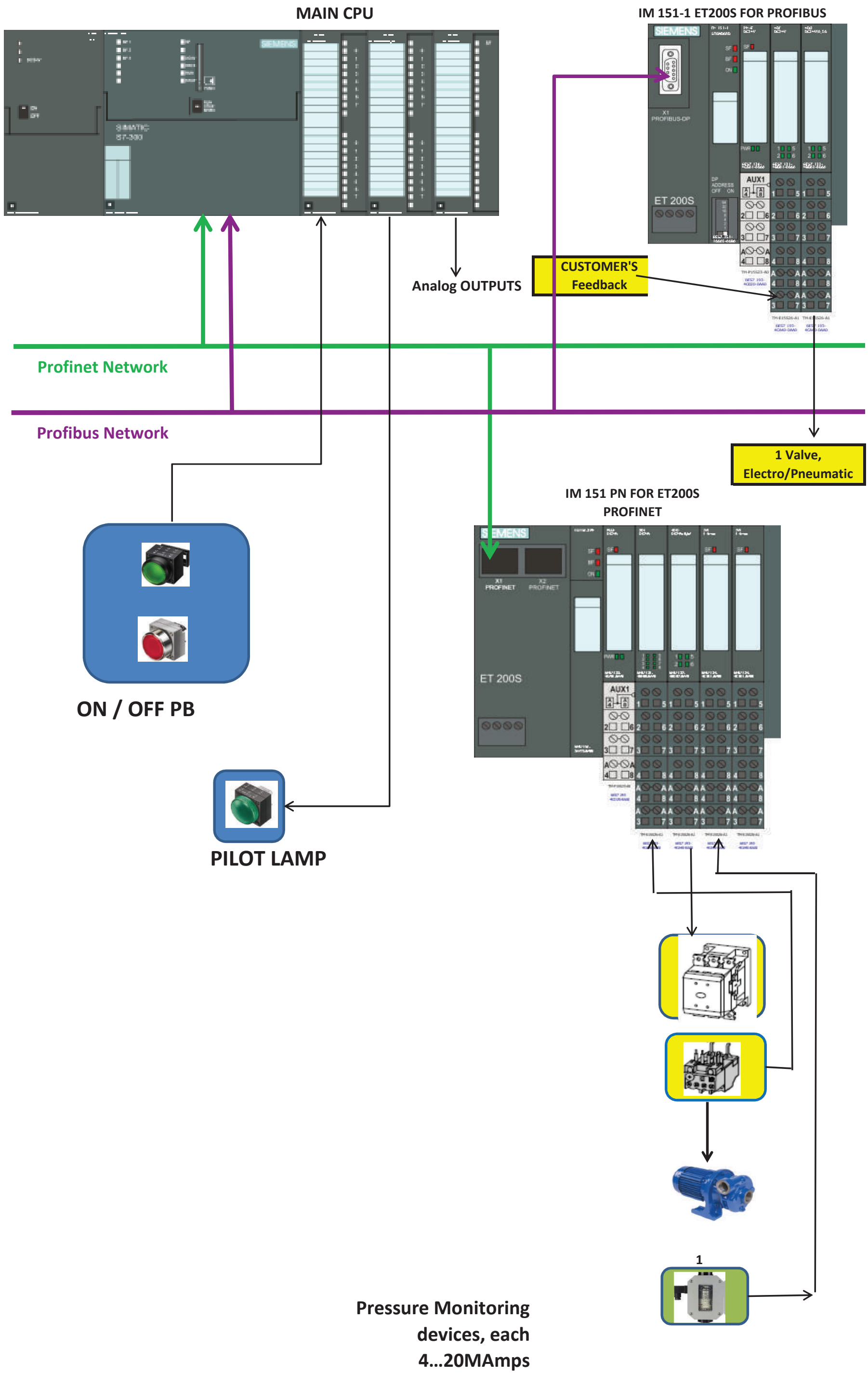
MAIN CPU
IM 151-1 ET200S FOR PROFIBUS
Analog OUTPUTS
CUSTOMER'S Feedback
Profinet Network
Profibus Network
1 Valve, Electro/Pneumatic
IM 151 PN FOR ET200S PROFINET
ON / OFF PB
PILOT LAMP
1
Pressure Monitoring devices, each 4…20MAmps

PROJECT SET-UP

- √ Launching the Project
- √ Selection of the CPU
- √ Default Language Selection
- √ Assign a Project Name

SETTING UP THE MAIN RACK:

- √ Open-Up The HARDWARE Configs.
- √ Selection of the Digital IOs
- √ Selection of the Analog IO
- √ Configure the ANALOG Ch whether V or I

SETTING UP THE PN (PROFINET) NETWORK:

- √ Open-Up The PN IO.
- √ Select The Properties
- √ Assign the IP Address as needed & add network
- √ Insert Profinet IO System

SETTING UP THE PN (PROFINET) IO:

√ Insert the PN Adapter / ET200S

√ Assign the IP Address, Device Name

!!! DEVICE NAME IS VERY IMPORTANT FOR SETTING UP THE NETWORK !!!

√ Insert the DI IOs, Analog IO

√ Configure the AN IO Ch

SETTING UP THE DP (PROFIBUS) NETWORK:

√ Select The Profibus Network

√ Assign the Address (Leave it to Default)

SETTING UP THE PROFIBUS IO:

√ Insert the PROFIBUS Adapter, ET200S

√ Assign the Profibus Address, Name

√ Insert the IO Modules

√ Insert the Main Rack Power Supply Module, which

EDIT SYMBOLS:

- √ Select The IO Module as targetted.
- √ Refer to the initial, Main Task IO Description
- √ Assign the Symbolic Names
- √ For Analog IO, Better to Change from WORD to INT
- √ Refer back to the Optional Way of cross-checking C

!! ***THIS SYMBOL EDITING EXERCISE ACCOUNTS FOR 4 PUMPS, THAT WE WILL BE USING IN OUR 2ND EXERCISE.***

Controls Explorer

Controls-Explorer.com

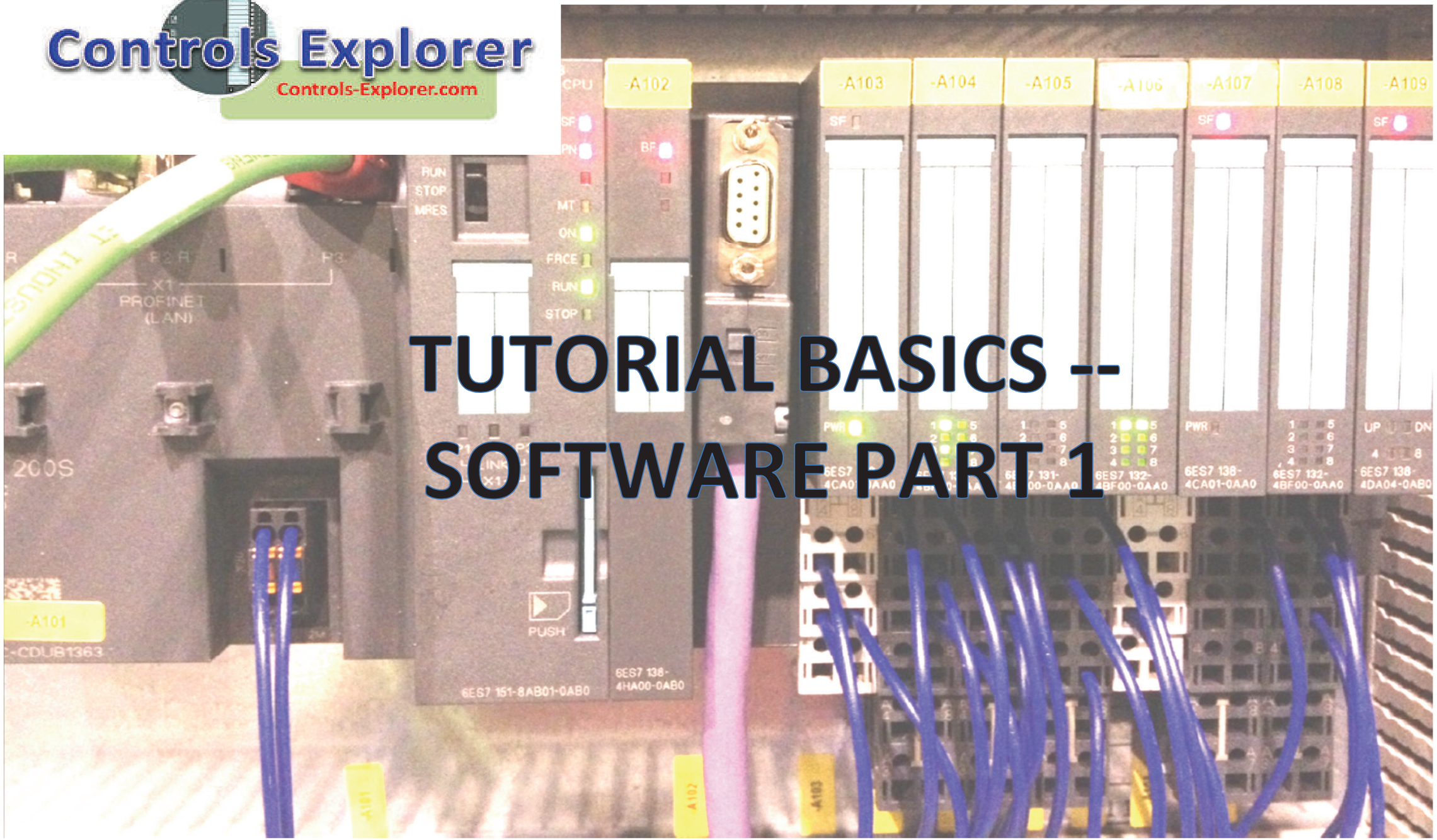

TUTORIAL BASICS -- SOFTWARE PART 1

EDITION 1.000

SIEMENS TUTORIALS: BASICS -- SOFTWARE PART #1

Contents:

EDITION 1.000

SOFTWARE ARCHITECTURE & INSERTING SOFTWARE BLOCKS

BASICS TUTORIAL PART I

- √ Creating some Basic (Blocks) Architecture before writing the Codes
- √ Familiarity with the Basic Programming Blocks
- √ BLCOKS Needed for the BASICS: OB, FB, FC, DB --- To begin with.
- √ At this stage, Blocks like UDT, SFB, SFC, VAT etc. etc., Covered in the Next session.

Controls Explorer

Controls-Explorer.com

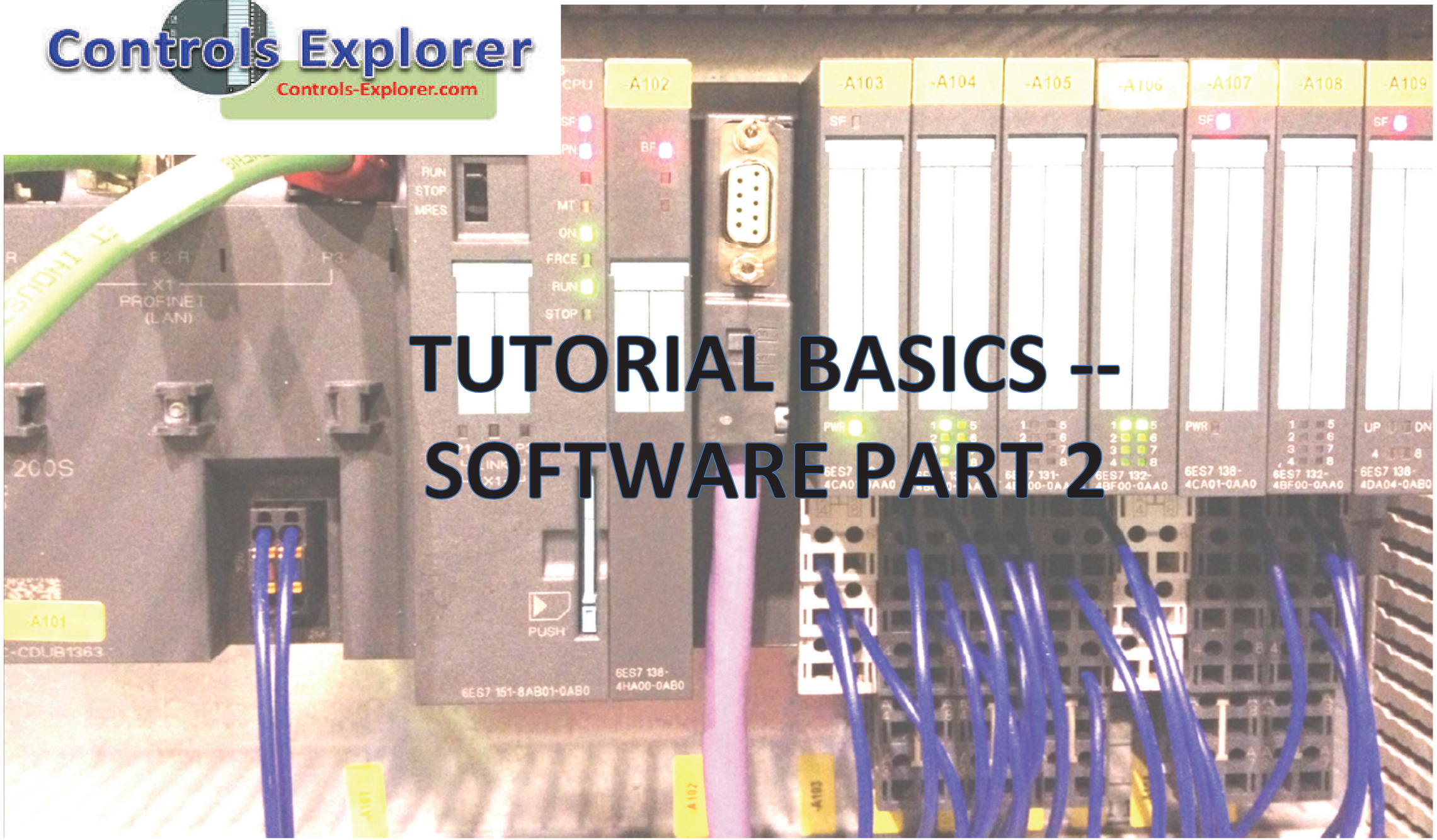

TUTORIAL BASICS -- SOFTWARE PART 2

EDITION 1.000

SIEMENS TUTORIALS: BASICS -- SOFTWARE PART #2

Contents:

EDITION 1.000

BASICS PROJECT TASK: #2

CONTROLLING *4 WATER PUMPS* , WITH EACH PRESSURE FEEDBACK MONITORING AND EACH RE-TRANSMITTING.

√ **Learn how to use Interface within FC, Instead of Absolute addressing within the FC.**

√ **Learn how to USE / WRITE any similar Code only once, and call them multiple times.**

√ **How to use UDT for any DB**

NOTE: IN THIS SCOPE WE ARE NOT COVERING ONCE AGAIN THAT HOW TO LAY THE HARDWARE OR EDIT SYMBOLS, ALL COVERED UNDER THE SCOPE 1.

UNDERSTANDING THE MAIN TASK / EXAMPLE PROJECT:

√ 1. Control 4 water pumps, by Start / Stop PB. USE HMI as well for all the PB Functions.
EACH Pump to have PILOT LAMP, "PL";
Location: Local in the Main Panel, Start / Stop PB.

√ 2. Each Pump-Motor to have independent Contactor, Over-Load Relay.
Location: REMOTE "PROFINET" Network.

√ 3. Each Pump-Motor to have independent Analog Pressure Transducer, 4…20MAmps.
Location: REMOTE "PROFINET" Network.

√ 4. Retransmit The ANALOG Pressure signal, Individually, Hardwired by 0..10VDC to some 3rd party (Customer).
Location: Local in the Main Panel

√ 5. Precondition before starting the Pump (not an e-stop) by DI over Profibus (Customer).
Location: 2ND Remote (in the Field) Over PROFIBUS.

√ 6. EACH Pump Line has got CUSTOMER SUPPLIED Electro-Pneumatic VALVE, Must be turned-on by HMI PB.
Location: 2ND Remote (in the Field) Over PROFIBUS.

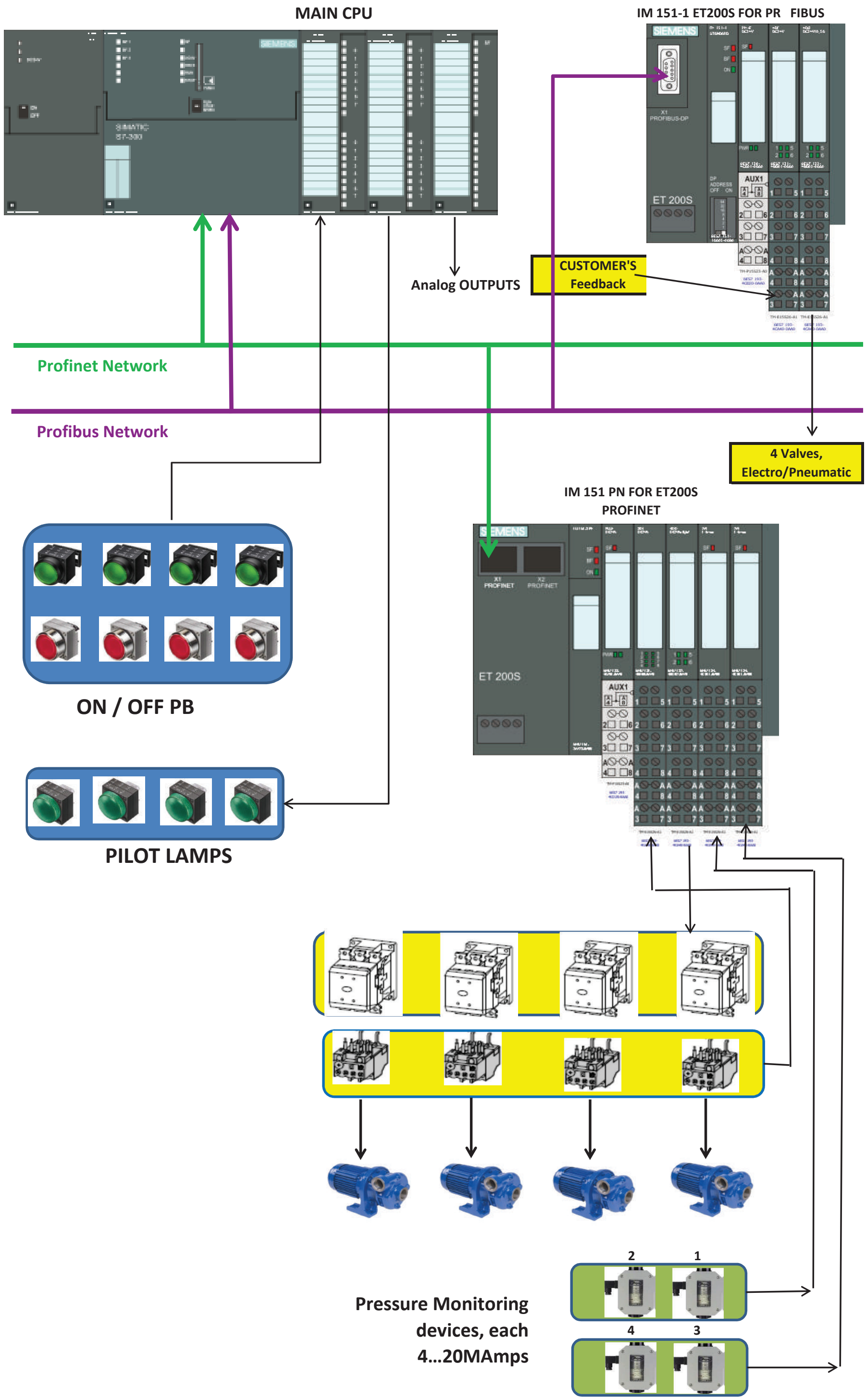
MAIN CPU
IM 151-1 ET200S FOR PR FIBUS
Analog OUTPUTS
CUSTOMER'S Feedback
Profinet Network
Profibus Network
4 Valves, Electro/Pneumatic
IM 151 PN FOR ET200S PROFINET
ON / OFF PB
PILOT LAMPS
Pressure Monitoring devices, each 4...20MAmps
2
1
4
3

Controls Explorer

Controls-Explorer.com

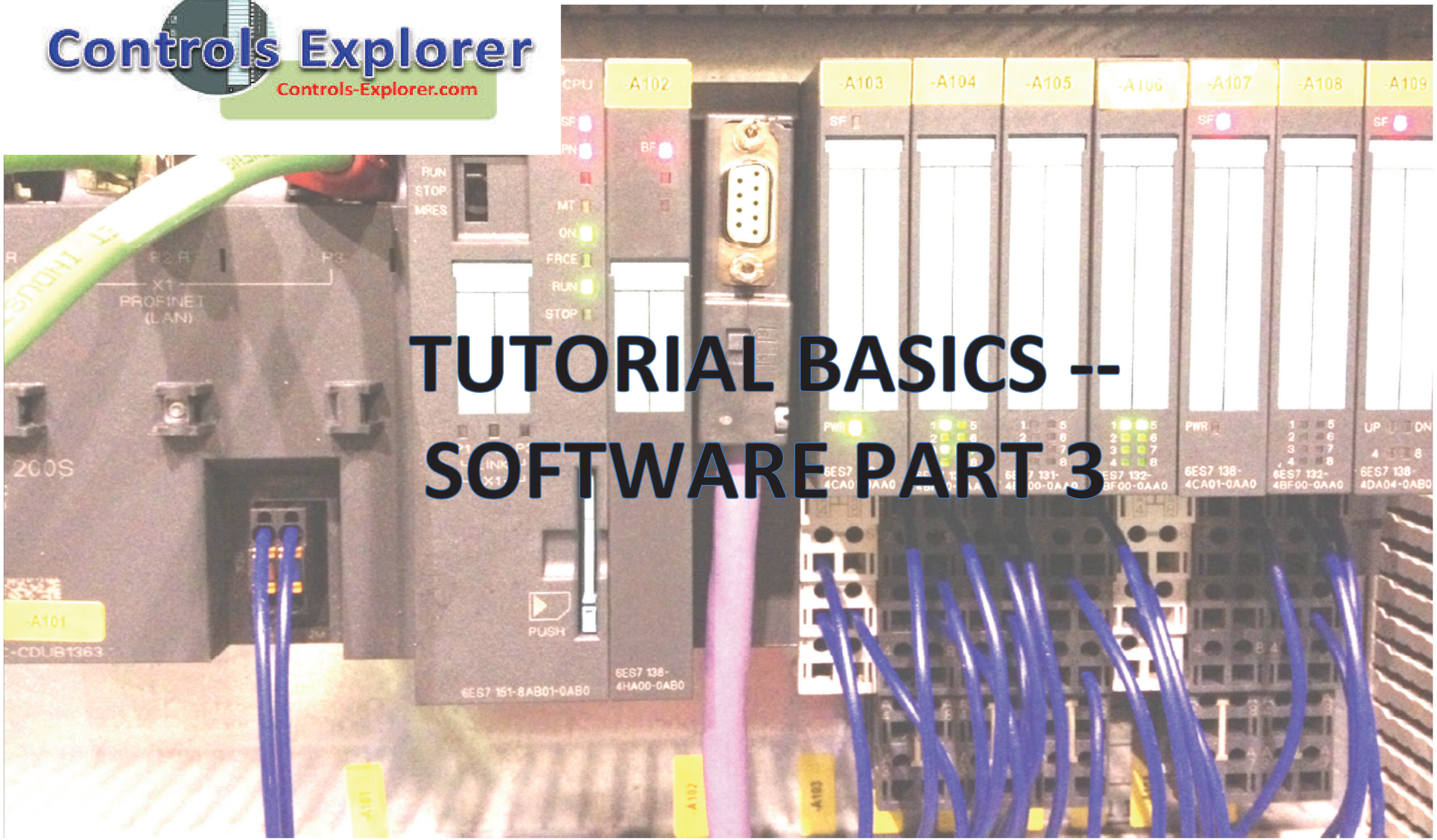

TUTORIAL BASICS -- SOFTWARE PART 3

EDITION 1.000

SIEMENS TUTORIALS: BASICS -- SOFTWARE PART #3

Contents:

BASICS PROJECT TASK: #3

IN CONTINUATION TO THE EARLIER PROJECT TASK, USAGE OF SOME MORE ADVANCED FEATURES OF THE PROGRAMMING

√ **Learn how to use UDT & Reduce your DB Typing Jobs**

√ **Learn how to USE IEC Timers SFB4 Blocks / Usage of Library.**

√ **Learn how to use your FC Blocks for Mathematical Calculations & call them multiply times.**

√ **ARCHIVE AND RETRIEVING THE FILE:**

ARCHIVE: SAVING THE DEVELOPED FILE IN A ZIP FOLDER

RETRIEVE: RETRIEVING THE ZIP FOLDER TO THE USER'S FILE

CREATING A UDT & INTEGRATE INTO A DB
(THIS BASICALLY SIMPLIFIES YOUR DB TYPING JOB)

√ CREATE UDT FOR ONE PUMP

√ CALLING THE SAME UDT MULTIPLE TIMES AS NEEDED

CREATING A IEC TIMER SFB4

- √ CREATING AN IEC TIMER SFB4, CALLING THE TIMER
- √ YOU MAY NEED TO USE THIS SIMILAR TIMER A NO. OF TIMES, WHERE EASILY YOU CAN MOVE YOUR OWN PRESET TIME, WITHOUT ANY SPECIAL FORMAT.
- √ THIS TIMER ALLOWS YOU, ONE OF TH EEASIEST WAY OF UTILISING IT'S ELAPSED TIME VALUE, IN MSEC.

CREATING FC BLOCKS FOR Y=(m1/m2)*X + C Calculation

√ HERE: "X" IS THE REAL INPUT VARIABLE.

ALL "m1" , "m2" , "C" ARE REAL INPUT VARIABLE

"Y" IS THE FINAL OUTPUT OF THE CALCULATION

√ SHOULD BE ABLE TO CALL THIS BLOCK END NO. OF TIMES FOR VARIOUS CALCULATION.

√ THIS IS NOTHING BUT AN EXAMPLE THAT HOW TO CREATE THIS KIND OF HANDY TOOLS FOR MATHEMATICAL CALCULATION SUPPORT

ARCHIEVING & RETRIEVING THE FILE: I.E. SAVE IT TO ZIP FOLDER & RETRIEVE FROM A ZIP FOLDER

√ LEARN HOW TO ARCHIEVE THE FILE, SELECT YOUR OWN DESTINATION.

√ LEARN HOW TO RETRIEVE THE FILE, SELECT YOUR OWN DESTINATION.

NOTE: THIS IS VERY IMPORTANT STEP FOR ANY STEP-7 PROJECT, FOR SAVING, STORING IN THE SERVER OR EVEN PASSING IT ON TO SOME-ONE ELSE.

Controls Explorer

Controls-Explorer.com

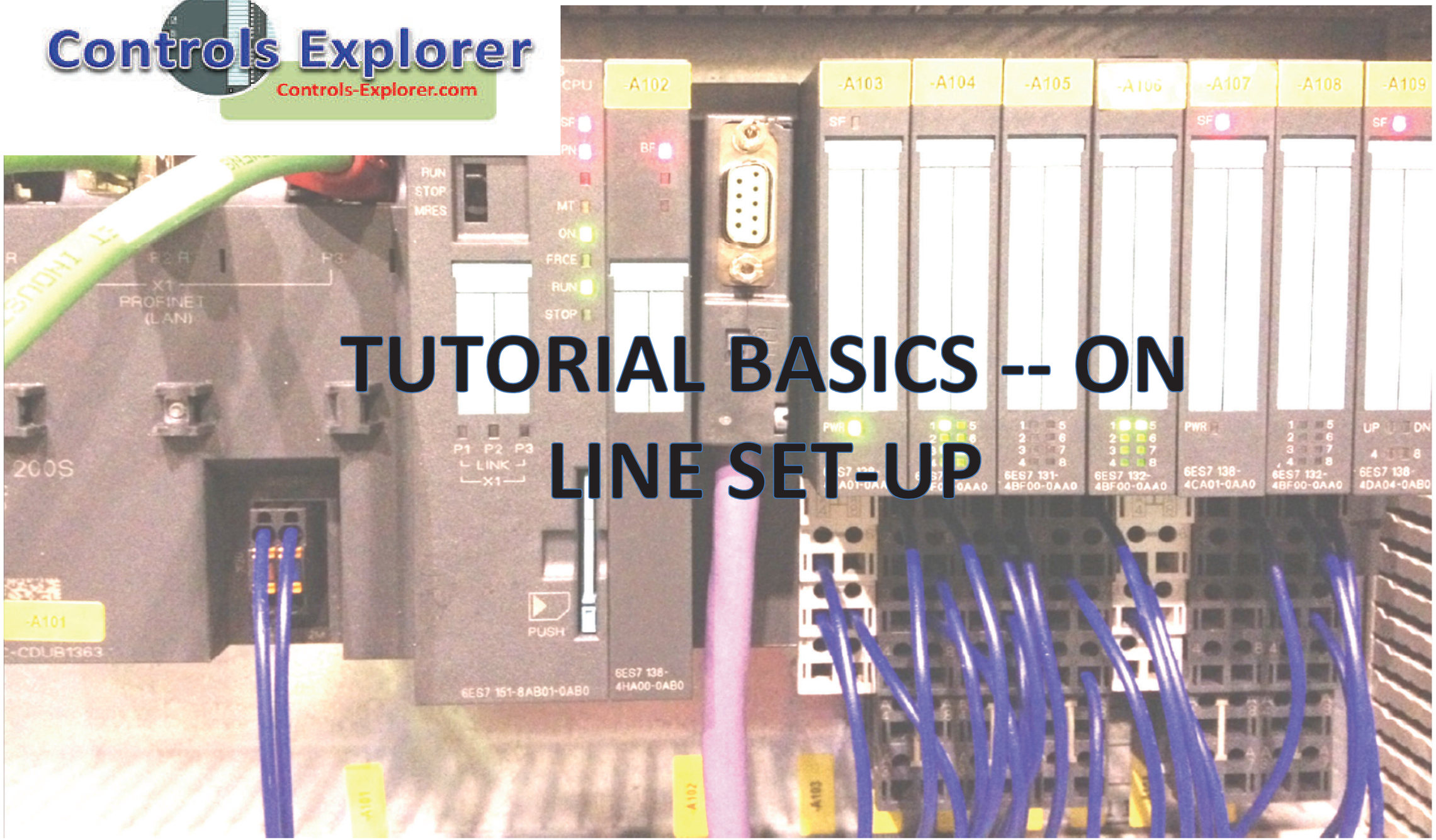

TUTORIAL BASICS -- ON LINE SET-UP

EDITION 1.000

SIEMENS TUTORIALS: ON-LINE SET UP

Contents:

EDITION 1.000

ESTABLISHING ON-LINE CONNECTION

ETHERNET -- HARDWIRED

√ SETTING UP THE LAPTOP / COMPUTER HARDWARE INTERFACE CARD

√ BROWSE FOR PLC / ETHERNET NODES.

√ SET-UP THE IP ADDRESS

√ ESTABLISH ON-LINE CONNECTION

DOWNLOAD / UPLOAD THE HARDWARE CONFIGS

√ ESTABLISH ON-LINE CONNECTION

√ DOWNLOAD / UPLOAD THE HARDWARE CONFIGS.

DOWNLOAD THE SOFTWARE CONFIGS & ON-LINE EDITING

√ FIRST TIME DOWNLOADING THE ENTIRE SOFTWARE

√ ON-LINE EDITING

√ MONITORING THE CALLED BLOCKS BY CALL-UP PATH

CONCEPT OF VARIABLE TABLE

√ CREATING A VARIABLE TABLE

√ ONLINE EDITING / MONITORING THE VAT / VARIABLE TABLE

Controls Explorer

Controls-Explorer.com

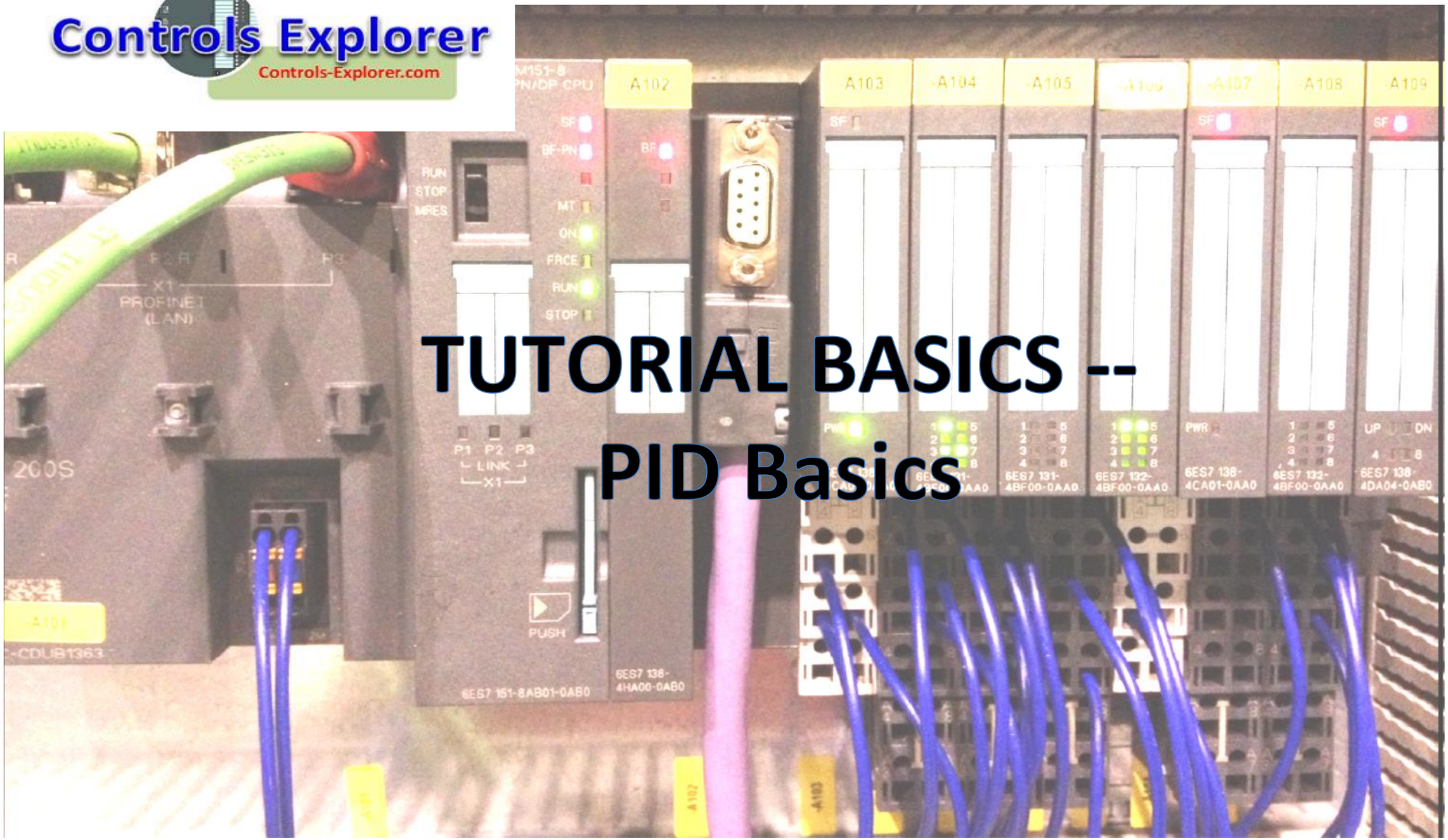

TUTORIAL BASICS --

PID Basics

BASICS OF PID: CONTINOUS CONTROLLER

NOTE: WE ARE JUST TRYING TO GIVE YOU SOME QUICK UPDATE -- HOW TO USE A SIEMENS PID BLOCK, AND FOR THIS EXAMPLE WE HAVE SELECTED FB41, I.E. CONTINOUS CONTROLLER.

PLEASE NOTE:

- **WE HAVE TRIED OUR BEST TO KEEP THIS AS SIMPLE AS POSSIBLE**
- IN THIS QUICK UPDATE, WILL GUIDE YOU THROUGH HOW TO CALL THE PID BLOCK
- HOW TO ASSIGN THE INSTANCE DB
- TWO OPTIONS OF USING IT: SCALED INTERNAL VARIABLE OR PERIPHERAL INPUT
- WHAT ARE THE BARE MINIMUM SETTINGS INVOLVED IN THE FUNCTION BLOCK.
- FINALLY, THIS IS JUST AN EXAMPLE, PROCESS TO PROCESS ALL THE PARAMETERS MAY VARY. THIS SHOULD NOT BE CONSIDERED AS SIEMENS PID CONTINOUS CONTROLLER BLOCK FOR ANY APPLICATIONS.

THIS SECTION ONWARDS ONLY FOR THOSE OPTED FOR THE SAFETY CODES.

THIS SECTION IS NOT COVERED UNDER THE NORMAL STANDARD CODES.

IMPORTANT NOTE REGARDING SAFETY: PLEASE READ IT:

Achtung: Diese lernen Sie die Tools. Allerdings Individuelle Sicherheit von Maschinen erfordert kompetente Beratung.

Note: This SAFETY Codes teaches you the tools. However individual safety design of the machines requires competent consultation.

Or If you would like to know more / any question, please do write to us: Support@Controls-Explorer.Com

Controls Explorer

Controls-Explorer.com

TUTORIAL SAFETY CODES

EDITION 1.000

SAFETY CODES:

Contents:

SIEMENS SAFETY CODES:

HARDWARE CONFIGS:

- √ Execute a simple project with few E-Stops Connected to SAFETY I/P
- √ Some pair of SAFETY Relays (Guided Relay) connected to it's SAFETY OP, WITH IT'S "NC" FEEDBACK
- √ CONFIGURE THE SAFETY CARDS / DIP SWITCH SETTING
- √ ASSIGN THE SOURCE OF SIGNAL, DISCREPANCY TIME Etc.

FIRST: SOME GUIDELINES OF THE BASIC SAFETY WIRING, E.G. E-STOP (EACH WITH 2 NC)

√ LET'S ASSUME WE ARE USING 4/8F - DI SAFETY INPUT CARD, IN SOME REMOTE RACK. COULD BE A PROFIBUS OR MAY BE A PROFINET RACK … DOES NOT MATTER.

√ IT HAS GOT 8 SAFE INPUTS, FROM DI0 TO DI7.

√ A PAIR OF INPUT (LIKE ONE E-STOP PB, IT'S 2 NC CONTACTS) CAN BE USED AS ONE INPUT

√ EXAMPLE OF PAIR: (DI0 WITH DI4), SIMILARLY (DI1 WITH DI5), (DI2 WITH DI6), (DI3 WITH DI7)

EXAMPLE SCHEMATICS: ET200S (HIGH-FEATURE) PROFINET RACK -- SAFETY INPUT CARD, 4/8 INPUT 24VDC

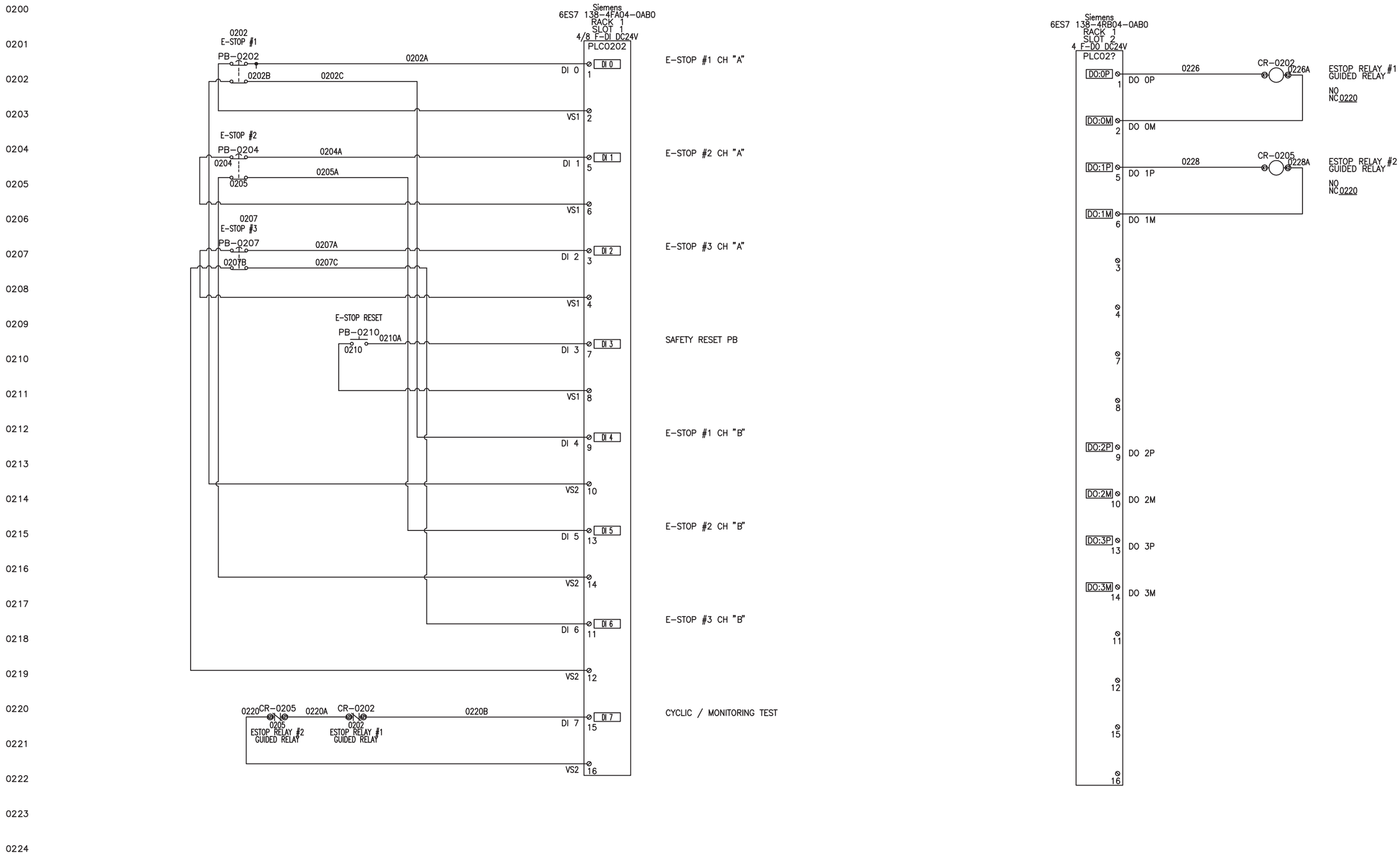
0200
0201
0202
0203
0204
0205
0206
0207
0208
0209
0210
0211
0212
0213
0214
0215
0216
0217
0218
0219
0220
0221
0222
0223
0224
EDITION 1.000
Siemens
6ES7 138-4FA04-0AB0
RACK 1
SLOT 1
4/8 F-DI DC24V
PLC0202
0202
E-STOP #1
PB-0202
0202A
0202B
0202C
DI 0
VS1
E-STOP #2
PB-0204
0204A
0204
0205A
0205
DI 1
VS1
0207
E-STOP #3
PB-0207
0207A
0207B
0207C
DI 2
VS1
E-STOP RESET
PB-0210
0210A
0210
DI 3
VS1
DI 4
VS2
DI 5
VS2
DI 6
VS2
0220
CR-0205
0220A
CR-0202
0220B
0205
ESTOP RELAY #2
GUIDED RELAY
0202
ESTOP RELAY #1
GUIDED RELAY
DI 7
VS2
E-STOP #1 CH "A"
E-STOP #2 CH "A"
E-STOP #3 CH "A"
SAFETY RESET PB
E-STOP #1 CH "B"
E-STOP #2 CH "B"
E-STOP #3 CH "B"
CYCLIC / MONITORING TEST
Siemens
6ES7 138-4RB04-0AB0
RACK 1
SLOT 2
4 F-DO DC24V
PLC02?
DO:0P
DO 0P
DO:0M
DO 0M
0226
CR-0202
0226A
ESTOP RELAY #1
GUIDED RELAY
NO
NC 0220
DO:1P
DO 1P
DO:1M
DO 1M
0228
CR-0205
0228A
ESTOP RELAY #2
GUIDED RELAY
NO
NC 0220
DO:2P
DO 2P
DO:2M
DO 2M
DO:3P
DO 3P
DO:3M
DO 3M

PROJECT SET-UP

- √ Launching the Project
- √ Selection of the CPU
- √ Default Language Selection
- √ Assign a Project Name

NOTE: EXAMPLE CPU 315-F 2PN/DP

SETTING UP THE MAIN RACK:

√ Open-Up The HARDWARE Configs.

√ Selection of the Digital SAFETY IOs

SETTING UP THE SAFETY CPU:

- √ Open-Up The PN IO.
- √ Select The Properties
- √ Assign the IP Address as needed & add network
- √ Insert Profinet IO System

EDIT SYMBOLS:

√ EDITING THE SYMBOLS FOR THE IN / OP MODULES

√ 3 E-STOPS PB (EACH GOT A PAIR OF NC CONTACTS)

√ ONE SAFETY RESET PB, ONE SAFETY RELAYS FEEDBACK MONITORING

NOTE: SAFETY RESET PB NOT NECESSARILY HAS TO BE A SAFETY I/P. IN THIS EXAMPLE WE HAD SHOWN THIS AS A SAFETY I/P.

SAFETY SOFTWARE PRE-CONFIGURATION:

√ CREATE THE F-CALL AND F-SHARE DB

√ CREATING THE F-RUNTIME GROUPS

√ COMPILING THE SAFETY

SAFETY SOFTWARE CODES:

- √ WRITE THE DATA WITH F-SHARE DB
- √ WRITE THE CODES WITH FB100
- √ SAFETY MODULES RE-INTEGRATION
- √ COMPILING THE SAFETY

COMPILE & DOWNLOAD THE SAFETY PROGRAM:

√ COMPILING THE SAFETY PROGRAM

√ ERROR CHECK

√ DOWNLOADING TO CPU